ISSUE	AMENDMENT	DATE

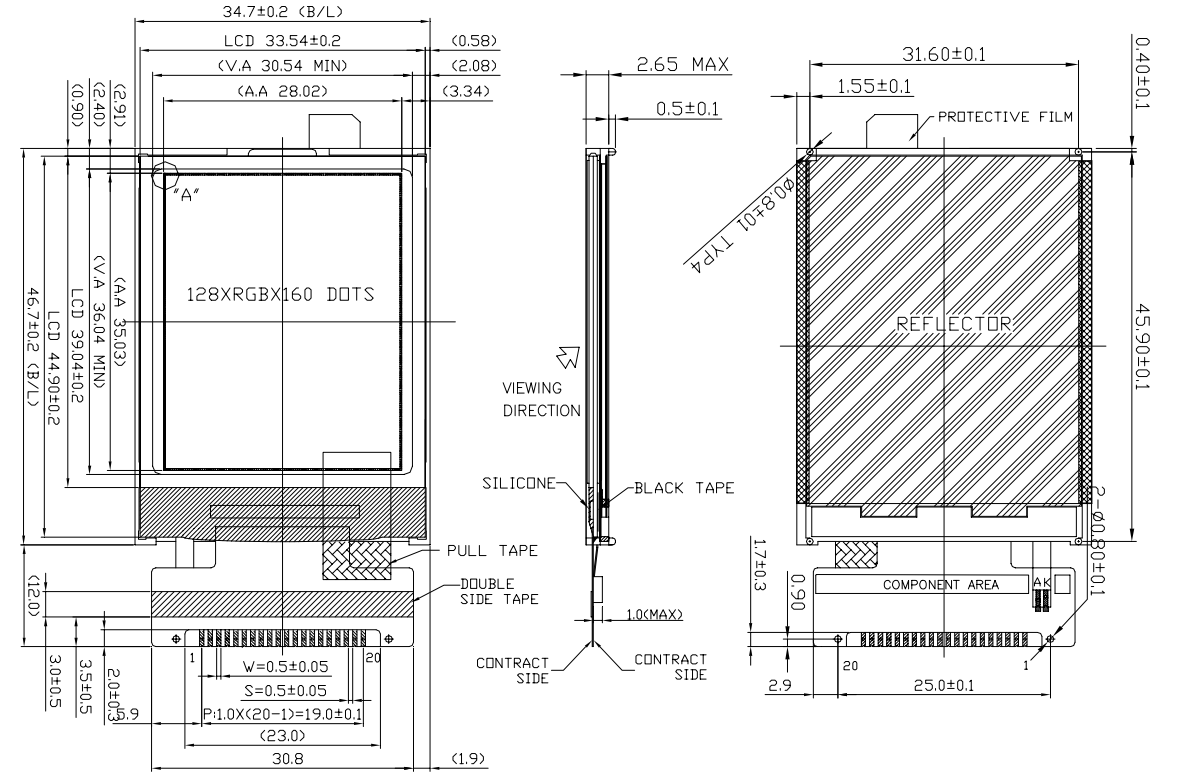

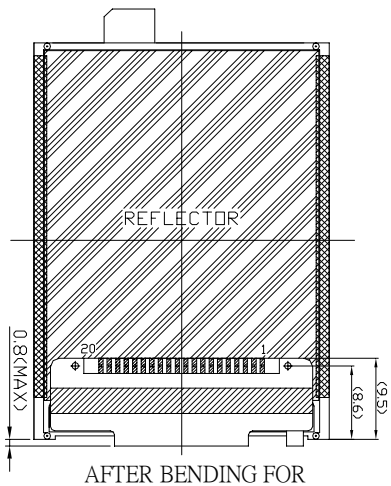

AFTER BENDING FOR CTM REFERENCE

PINS ASSIGNMENT:

1	BL_K
2	BL_A
3	GND
4	VDD
5	NC
6	NC
7	/CS
8	/RSTB
9	RS
10	WRB
11	RDB
12	DB7
13	DB6
14	DB5
15	DB4
16	DB3
17	DB2
18	DB1
19	DB0
20	GND

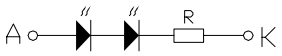

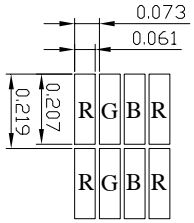

DETAIL A

DISPLAY TYPE	CSTN,65K +VE,TRANSMISSIVE
DISPLAY RESOLUTION	128 X RGB X 160
VIEWING ANGLE	6 O' CLOCK
MUX RATIO & BIAS	TBD
LCD CONTROLLER/DRIVER	T.B.D
LOGIC VOLTAGE	~3.0V
LCD DRIVING VOLTAGE	TBD
OPERATING TEMPERATURE	-20°C TO +70°C
STORAGE TEMPERATURE	-30°C TO +80°C

NOTES:

1. ◇ : SPECIAL CHARACTERISTIC
2. + : SAFETY CHARACTERISTIC
3. ▽ : CRITICAL DIMENSION
4. (...) : REFERENCE DIMENSION

MULTI-INNO TECHNOLOGY CO.,LTD.

TITLE: SPECIFICATION OF MODULE

PROJECT NO: MI128160FK

CUSTOMER NO: N/A

TOLERANCE UNLESS OTHERWISE SPECIFIED: X.X ±0.3, X.XX ±0.1

DIMENSIONS IN MM

MATERIAL: N/A | FINISH: N/A

SCALE: DO NOT ON SCALE | OVERALL THK: N/A

THIRD ANGLE PROJECTION

	NAME	SIGN	DATE
DRAWN:			07.03.28
CHECKED:			
APPROVED:			

ITEM NO.:

DESCRIPTION:

FILE NO: | REV: 0

SHEET 1 OF 1