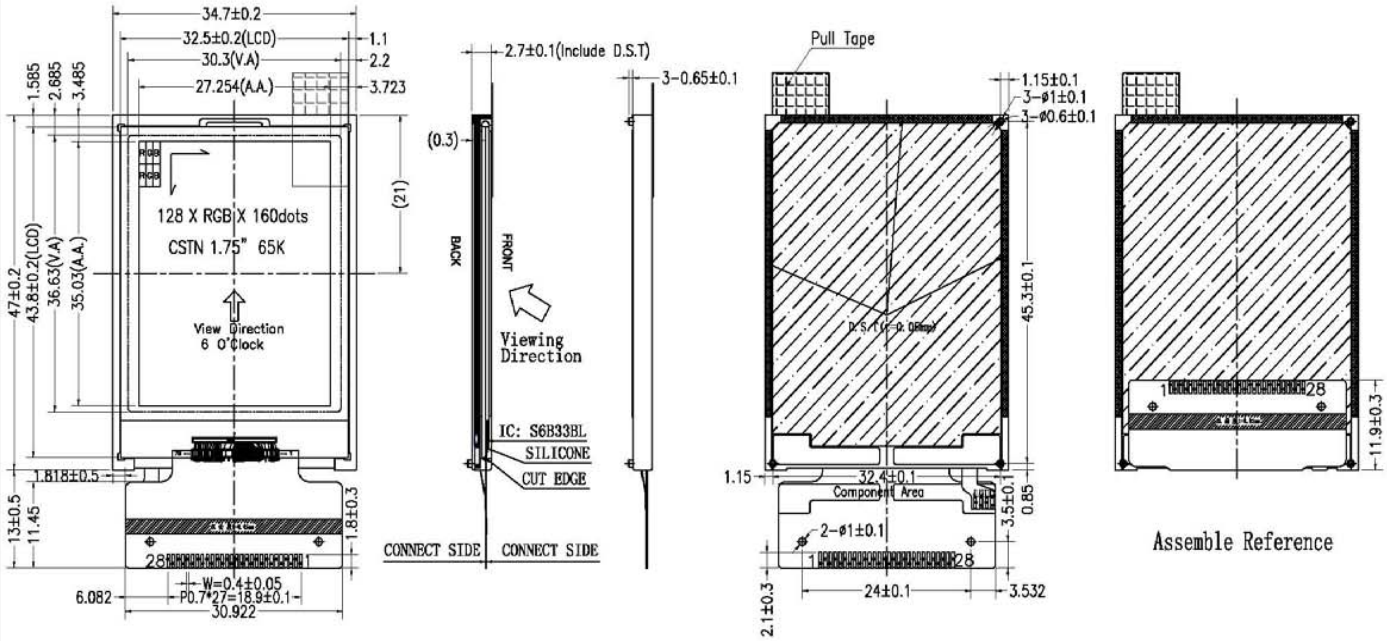

LED CIRCUIT DIAGRAM:

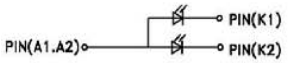

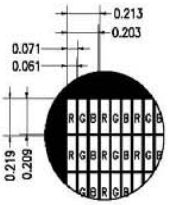

NO	Part Name	Quantity
6	Pull Tape	1
5	Shading Tape	1
4	Backlight(6892)	1
3	FPC	1
2	IC	1
1	LCD	1